GD-225XU

UNMANNED AERIAL SYSTEM

Designed to fly in any environment while carrying heavy weight cargo

- Industrial Grade Airframe
- Industrial Ground Control System
- Enterprise Grade Flight Controller
- Customisable options

Up to 32 minutes endurance

75 kg Maximum Payload

6000m ceiling

30Km Video & Worldwide Control

60 kg Standard Payload

Quick Release Battery System

E. & O.E. All specifications are based upon optimal conditions

GD-225XU

UNMANNED AERIAL SYSTEM

The GD-225X is designed to fly while carrying heavy weight cargo. The high-quality carbon fibre Hyper series frame has immense strength due to its unique patented design, specifically designed for flying with heavy cargo loads.

Maximum take-off weight	225 kg
Wingspan (motor to motor)	2400mm
Endurance	32 minutes
Encrypted radio communications	30 Km
Maximum Flight altitude	6000m
Propulsion Type	Electric
Maximum vertical speed	8m/s
Maximum Horizontal Speed	14m/s
Maximum payload	75Kg

CARGO DRONE

Features & Technologies

From years of use across a wide range of different industries and scenarios has guided our design to constantly refined our systems. Furthermore, this feedback has lead to a series of optional upgrades. So, whether you want to undertake either autonomous or manual flights.

Our enterprise autopilot does all the heavy lifting to make these ultra heavy cargo drone are easy to fly.

LED Navigation Lights

High brightness LED's to offer high visibility and orientation in all weather conditions

Manual/ Autonomous Modes

Either fly manually or plan the autonomous missions beforehand and execute it perfectly every time!

GPS Denied Flight

Ability to fly in areas with GPS, but also in GPS denied areas!

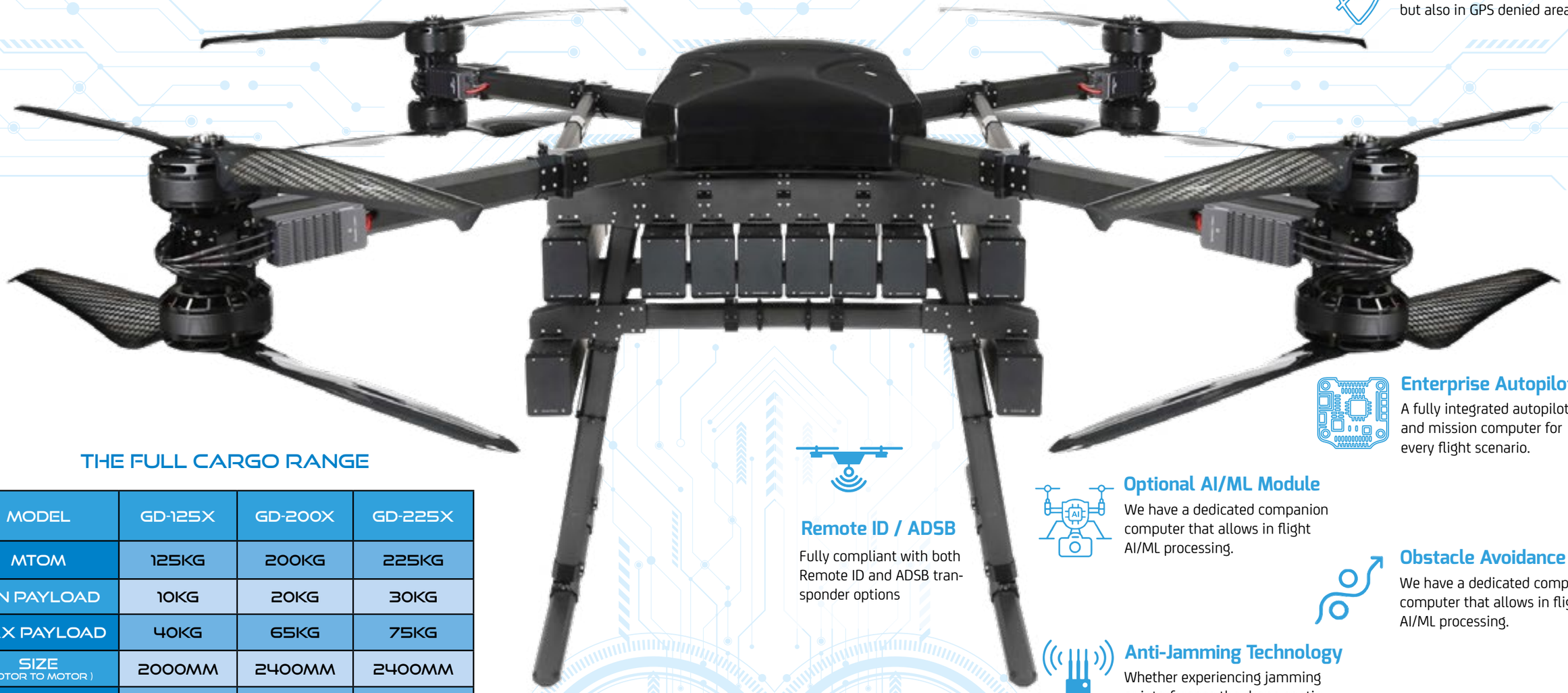

Enterprise Autopilot

A fully integrated autopilot and mission computer for every flight scenario.

Remote ID / ADSB

Fully compliant with both Remote ID and ADSB transponder options

Optional AI/ML Module

We have a dedicated companion computer that allows in flight AI/ML processing.

Obstacle Avoidance

We have a dedicated companion computer that allows in flight AI/ML processing.

Anti-Jamming Technology

Whether experiencing jamming or interference the drone continues to operate

THE FULL CARGO RANGE

MODEL	GD-125X	GD-200X	GD-225X
MTOM	125KG	200KG	225KG
MIN PAYLOAD	10KG	20KG	30KG
MAX PAYLOAD	40KG	65KG	75KG
SIZE (MOTOR TO MOTOR)	2000MM	2400MM	2400MM
ENDURANCE	40 MINS	36 MINS	32 MINS

GD-225XU

UNMANNED AERIAL SYSTEM

MODEL	
Dimensions (Unfolded) mm	1696 x 1695 x 1150
Dimensions (Folded) mm	1200 x 900 x 1150
Frame Size (mm)	2400
Maximum Speed	14 m/s

WEIGHTS	
Max Take Off Weight (MTOM)	225 kg
Max Payload	75 kg
Frame Weight (w/o Batteries)	62 kg
Frame Weight (with Batteries)	152 kg

PROPULSION	
No. of Motors	8
Motor Max. Cont. Power	15513w
ESC Rating	300A
Motor kv	43kv
Max Speed (Horizontal)	14 m/s
Max Speed (Vertical)	8 m/s

POWER	
Battery Cells	24S
Voltage	88.8v
Battery Peak Voltage	100.4v
Battery Connector	AS150 / XT 150
No. of Batteries	8
Min Battery Discharge Rate	25S (per battery)

PROPELLERS	
Material	Carbon Fibre
Orientation	4x CW & 4x CCW
Propeller Type	NS47 x 18

ENVIRONMENTAL	
Operating Temperature	Carbon Fibre
Operating Ceiling	Weight Dependent

SPARES

ACCESSORIES & SUPPORT

We provide our customers with a full training course on how to operate our UAS systems. We also have a specialist team for after sales support and assistance to ensure that the data captured is done so efficiently, and to the highest quality results possible.

Due to the industrial design of our drones, minimal spare parts are required, and those that are, are typically modular so that they can be replaced easily.

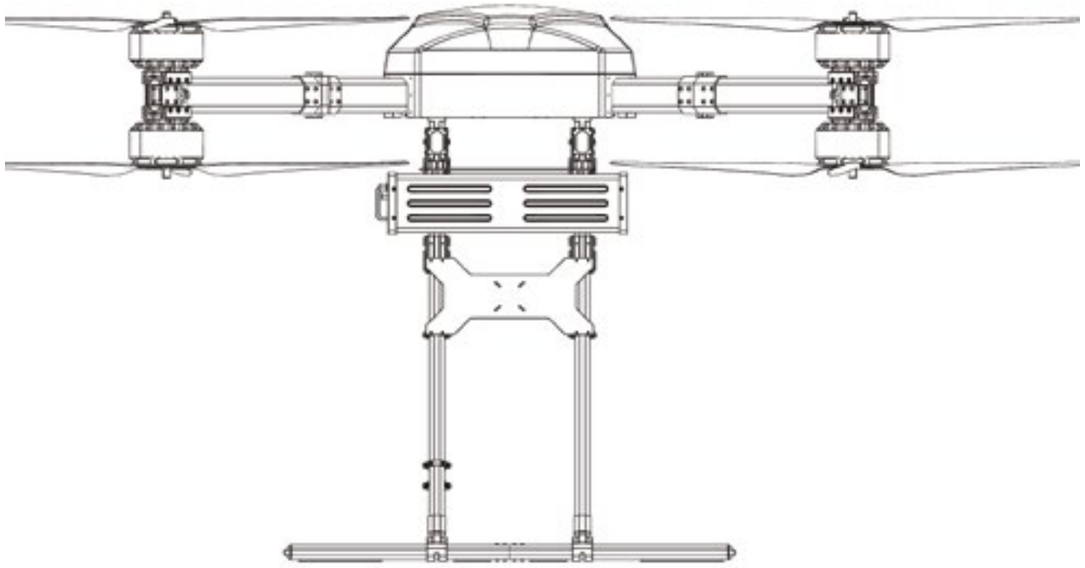

WHAT YOU GET AS STANDARD:

- GD-225X UAS CARGO DRONE
- RUGGED HAND-HELD GROUND CONTROL STATION
- 10 X BATTERY CANISTERS & BATTERY CHARGER
- 20 X FLIGHT BATTERIES & CHARGER
- MISSION PLANNER SOFTWARE
- FPV CAMERA
- WEATHER PROTECTION CANOPY
- SPARES (MOTORS / ARM / PROPS)
- TRANSPORTATION CASE

PAYLOAD
TYPES

CAMERA SYSTEMS

WINCH SYSTEMS

FIRE FIGHTING

CARGO SYSTEMS

SPECIALIST SENSORS

PAYLOAD
OPTIONS

The GD-225X is a multi-purpose UAS, allow you to change the payload on-the-fly depending upon mission tasks, but designed to be flexible too.

EO/IR/MULTISPECTURAL

Whether a small high resolution or an infra red thermal imaging camera to a full blown Hollywood IMAX camera setup with follow focus and gyrostabilized gimbal, Gryphon Airframes are trusted to carry these valuable packages.

CARGO

With the ability carry very large payloads there are various cargo payload options, from a winch to lower the payload down, to landing and then releasing the payload before then taking off and continue as required, all managed remotely.

LIDAR

Industry standard tool for rapid collection of accurate and dense topographical to asset data. Commonly used to create high resolution maps, with applications in surveying, asset location to forestry or laser guidance.

IMSI

Is a telephone interception device used for intercepting mobile phone traffic and tracking location data of mobile phone users. Used in a wide range of surveillance operation to disaster situations to track and communicate with people.

SAR

Is capable of high-resolution remote sensing, with bespoke SAR ground control mission planning to allow multi UAS's to cover large areas effectively. With frequency hopping autopilot safely avoids weather induced signal losses. SAR operations can be carried out at day and night as required.

MESH

The onboard electronics use the latest MESH technology meaning that the UAS data signal can auto re-routed either through a repeater or another drone giving a strategic failsafe but also offering extendable range.

CUSTOM INTEGRATIONS

With its large payload and endurance we have delivered numerous bespoke client solutions from custom LIDAR for very accurate survey grade point cloud capture, to forestry fire fighting, to installing specialist powerline equipment to measure the UV corona on high voltage powerlines.

CONTACT US FOR MORE INFORMATION IF YOU ARE INTERESTED IN INTEGRATING A SPECIFIC SENSOR !

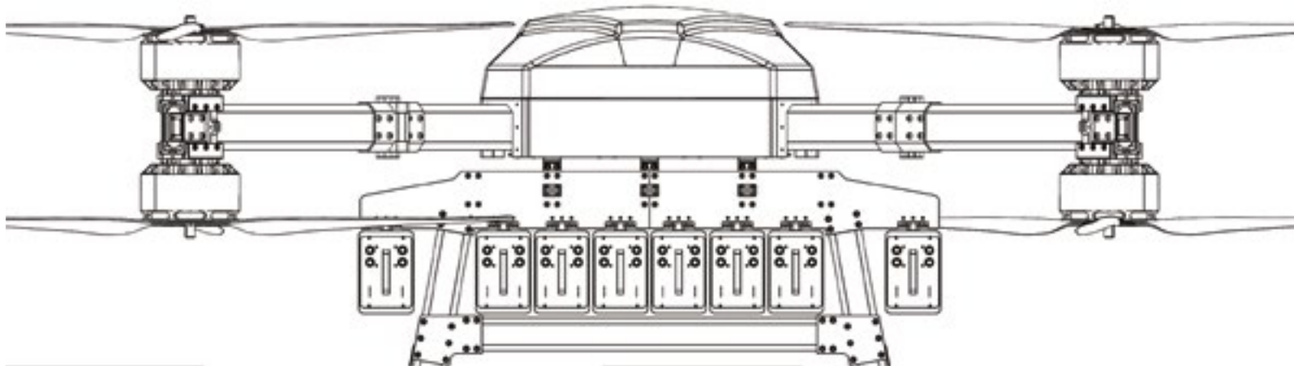

COMMUNICATION
OPTIONS

Control and communication is essential for a successful mission. Our drones have been proven under very extreme circumstances. To achieve this, we use the latest communication technologies that have multiple fail-safes from anti-jamming to visual flight operation in GPS denied areas.

LINE-OF-SIGHT COMMS

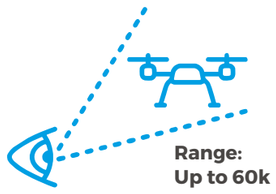

We offer a wider range of communication options with standard line of sight on our all-in-one industrial ground control station. Utilising multiple radio connections the datalink carries video and control data streams with an effective range of up to 60km. With frequency hopping AES-256 encryption to guard against GNSS or signal loss.

MESH COMMS

Range:
Mesh Network Dependent

Utilising the latest technologies our flight communications system are also equipped with MESH technology allowing the BV-LOS signal to be extended by either utilising repeater stations or other MESH drones that automatically search for a route to the ground control station

4G/LTE COMMS

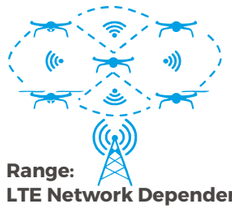

Range:
LTE Network Dependent

5G/LTE Data transmission is via secure VPN using TLS, IPSec, PPTP & L2TP protocols. With 5G/LTE communications it allows the drone to be controlled anywhere as long as there is a stable cellular network.

SATCOM

Range:
Unlimited

SATCOM is primarily used for providing beyond visual line of sight capabilities where standard line-of-sight datalinks are rendered unworkable at great distances due to the curvature of the earth. Drones may also fly out of range of ground networks such as 5G and other cellular services. A satellite can be used to relay and amplify radio or microwave frequency signals between the vehicle and its base station for worldwide coverage.

OUR GROUND CONTROL STATION IS POWERED BY ADVANCED SOFTWARE TECHNOLOGY TO PROVIDE FEATURES LIKE:

CONTROL ONE UAV USING MULTIPLE GCS

Daisy chain GCS to allow extended range by passing from one to another during flight

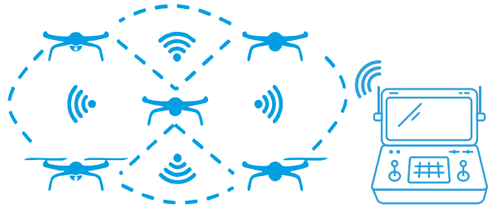

RELAY DATA SIGNALS BETWEEN UAVS

Several UAVs use MESH technology to daisy chain to route data to one GCS

CONTROL SEVERAL UAVS FROM ONE GCS

One GCS can control numerous UAVs for accelerate data capture or area covered such as SAR missions

LIVE STREAM TO MULTIPLE GCS / REMOTE COMMAND CENTRE

Allow all remote agents to see the live data feed at the same time

GCS MAY BE INTEGRATED SEPARATELY OR MOUNTED INTO MOBILE VECHICLE TRAILER SYSTEM OR BUS.

GCS
GROUND CONTROL SYSTEMS

We have a range of different Ground Control Station ("GCS") options to suit the type of activity and payloads that you may carry

We have a range of different GCS options to suit the type of activity from small lightweight handheld controller to larger rugged industrial fully configurable ground control stations. These portable units have everything required to either fly the drone manually to planning, monitoring and managing fully autonomous flights.

TBE-H16P

A small 7 Inch handheld GCS with HD sunlight display with 1080p high-definition screen. The controller is IP67 rated with 8 hour operation. The data and video link has a range of 20+km.

TBE-T30

An industrial touchscreen 10.1 Inch handheld aluminium GCS with FHD sunlight display with 1080p high-definition screen. The controller has 23 configurable channels and numerous I/O ports, and supports 3 main frequencies 800MHz, 1.4GHz & 2.4GHz as well as supporting all third party communications links

TBE-GD-GCS

A rugged Pelican case containing dual 11.1 inch high-definition embedded screens. The controller has 14 configurable switches and an industrial APEM Hall Effect 3 Axis Joystick.

Within the case is an Intel computer with SSD HD for fast boot up times. The case is powered by a 6S 10,000mAh battery.

THIS PAGE HAS BEEN LEFT BLANK INTENTIONALLY

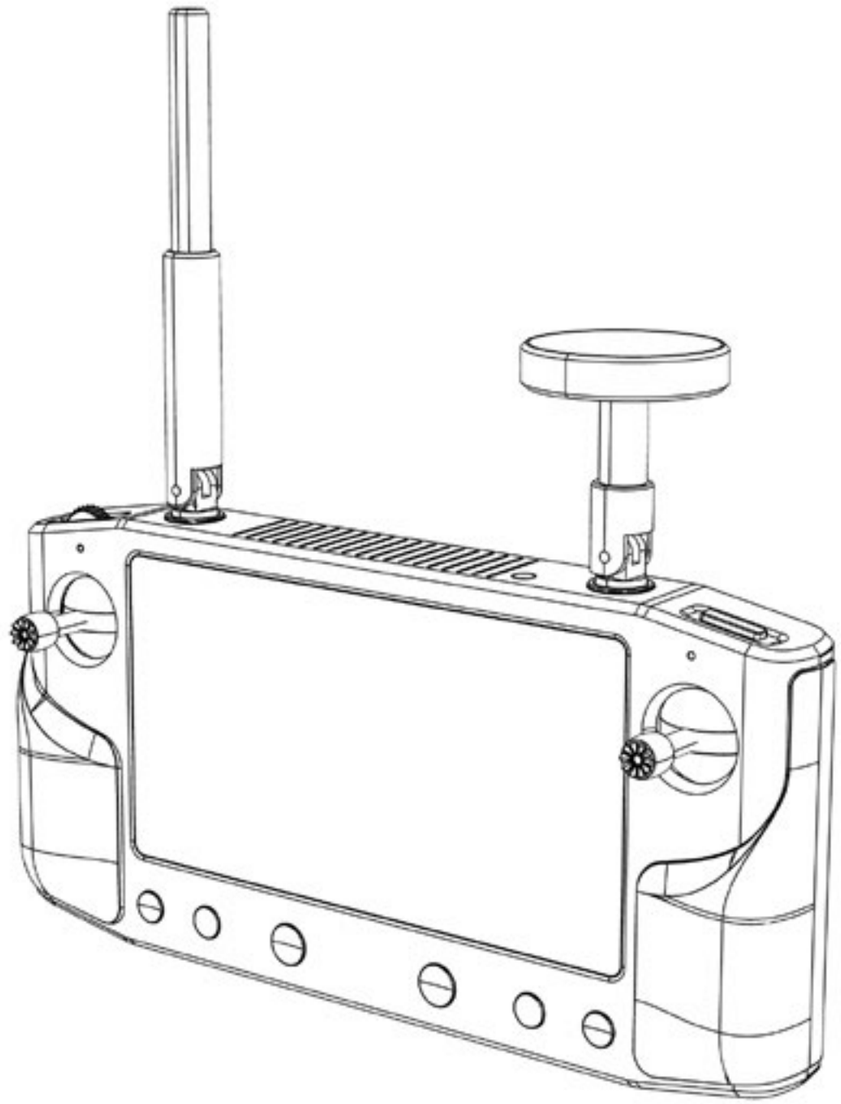

SOFTWARE
MISSION PLANNER

Mission Planner is specialised software developed for autonomous flights. It also allows real time flight information as well as report generation and fleet management for the professional and enterprise versions.

CUSTOM INTEGRATIONS

With simple controls and intuitive interface, our Mission Control suite allows the same mission planning and execution experience for any use case, and on various devices whether in your office or in the field. Standardise your operations and reduce training time and resources, scale up your missions easily and save execution time by planning from remote locations.

With our Mission Planner software you can maximise the results of your mission thanks to the tight integration with flight control software for the control of the camera and gimbal. Immediately validate collected data through live video and instant image download.

CONTACT US FOR MORE INFORMATION IF YOU ARE INTERESTED IN INTEGRATING A SPECIFIC SENSOR !

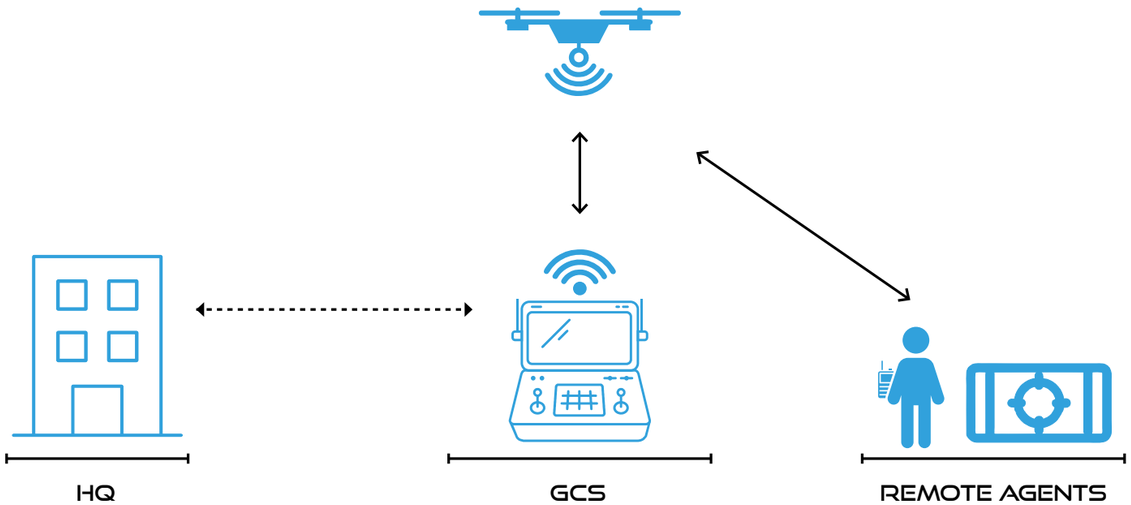

FEATURES

- MISSION PLANNING
- DETECT, IDENTIFY AND ANALYZE TARGETS
- TRANSFER TO EXTERNAL SOURCES VIA API
- MOVING LIVE MAP
- AUGMENTED REALITY SUPPORT
- SECURITY PROTOCOLS
- ADD OBJECTS WITH ONE CLICK
- AUTOMATIC COMBINATION OF ROUTE WITH PHOTOS
- GET CO-ORDINATES OF THE OBJECT
- PDF REPORT GENERATION

THIS PAGE HAS BEEN LEFT BLANK INTENTIONALLY

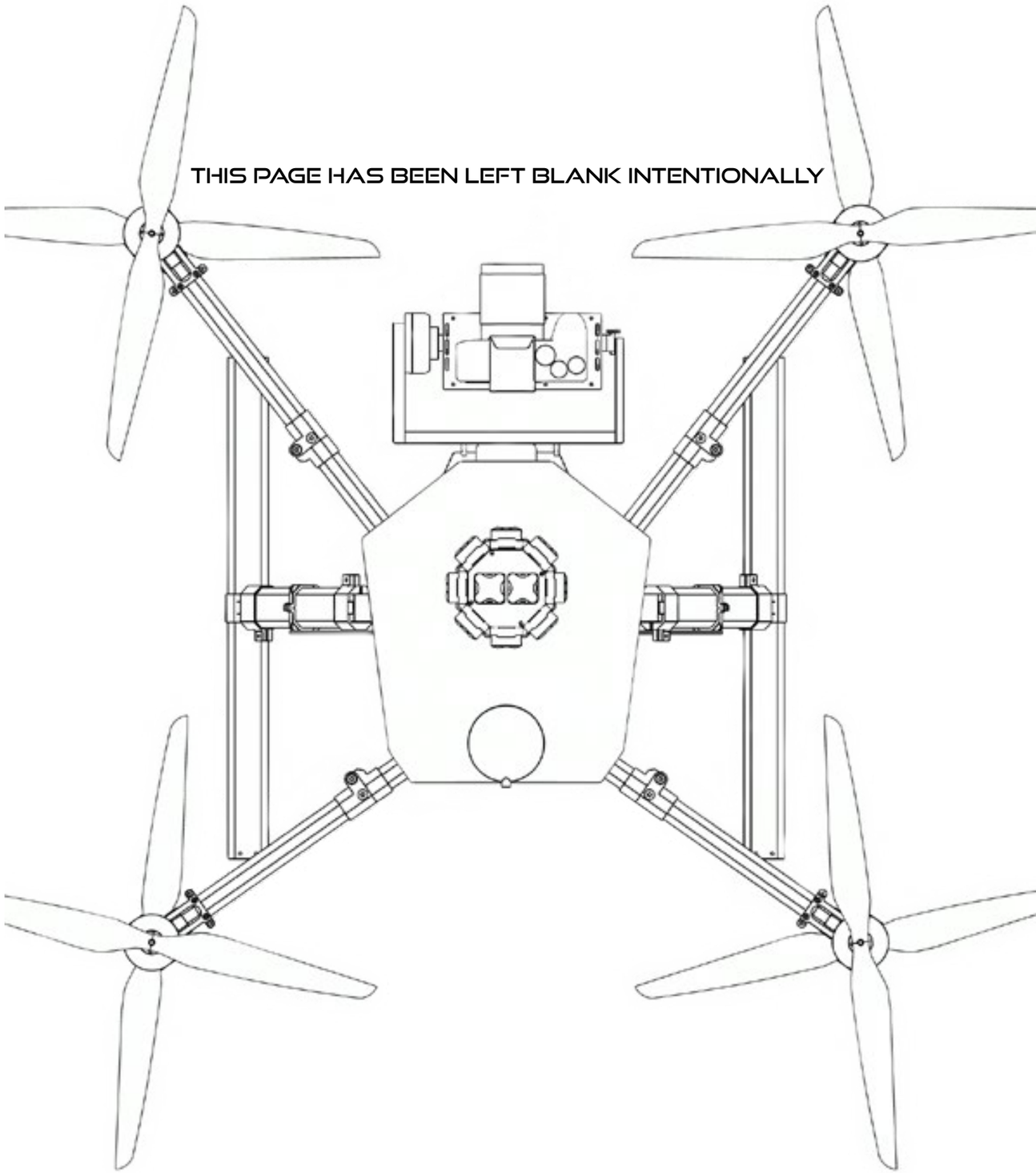

GRYPHON DYNAMICS

GRYPHON DYNAMICS .CO.UK

INFO@THE BIONIC EYE .CO.UK